MICRO-EPSILON

More Precision

wireSENSOR // Draw-wire mechanics for installation of rotary encoders

Draw-wire mechanics for individual encoder installation
wireSENSOR

- Measuring ranges up to 50,000 mm
- Compact design with large measuring range
- Easy, quick and flexible installation
- High operational safety & long service life
- Ideal for custom design and large quantities
- Analog and digital outputs

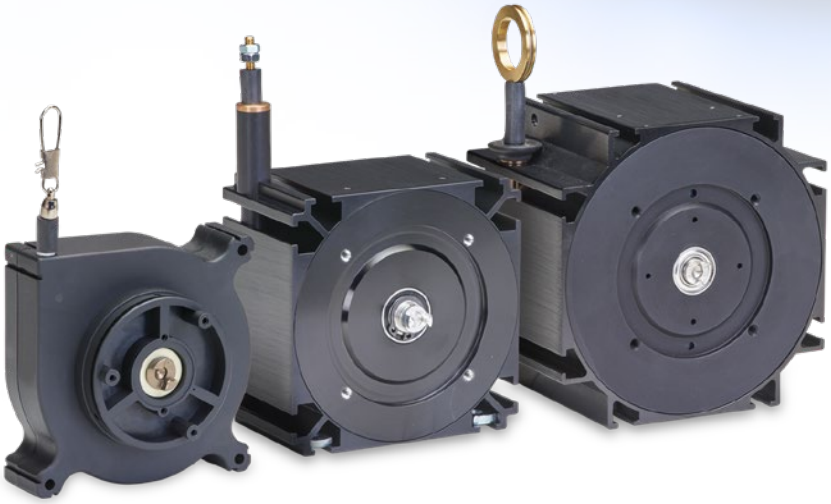

Measuring principle

Draw-wire displacement sensors measure linear movements using a highly flexible steel wire. High quality components ensure a long service life and high operational reliability.

Micro-Epsilon offers numerous models based on different draw-wire mechanical principles to connect different rotary encoders. For special applications involving large quantities, we develop and manufacture customized OEM designs.

wireSENSOR models stand out due to their optimized ratio between measuring range and size, easy installation and handling. Their robust sensor design enables applications in harsh ambient conditions.

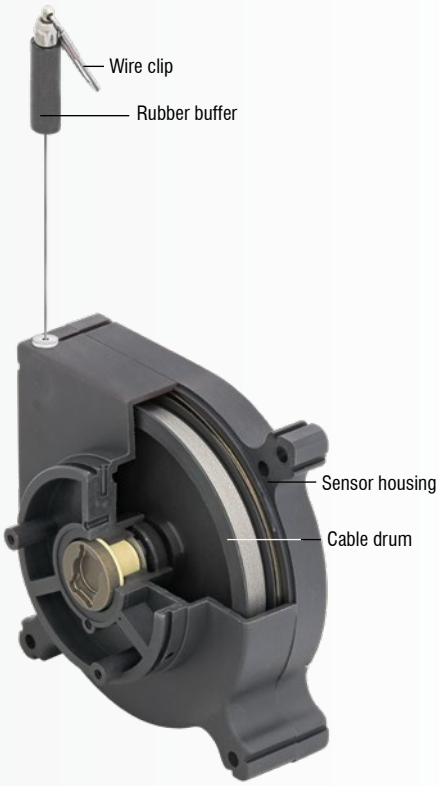

Robust draw-wire mechanics for encoder installation

The wireSENSOR mechanics are designed for mounting incremental or absolute encoders. This means that the interface, resolution and type of connection can be individually determined and adapted to the signal processing. High-quality precision components and a robust design ensure high operational safety and a long service life even under harsh industrial conditions.

A complete measuring unit consists of the basic draw-wire mechanics and the adapter for the customer-specific encoder. The adapter contains all the necessary mounting accessories for mounting your encoder.

The following encoder types can be installed by default:

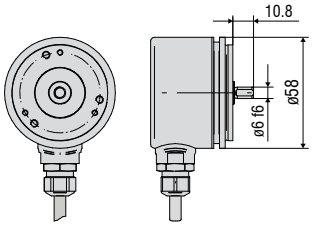

Synchro flange (standard) with WDS-EASxx adapter

- Housing size 58 mm
- Shaft diameter 6 mm
- Shaft length 10 mm

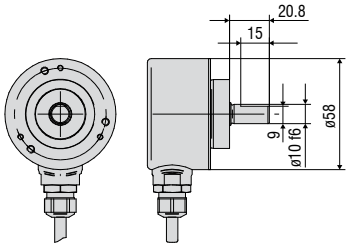

Clamping flange with WDS-EACxx adapter

- Housing size 58 mm
- Shaft diameter 10 mm
- Shaft length 20 mm

Contents

Model	Measuring range in mm	Page
MK60	2400	4
MK88	2300 5000	5
K100	8000	6
P60	2000	8
P85	2500	9
P96	3000	10
P115	5000 7500 10,000 15,000	11
P200	30,000 40,000 50,000	12
Options		13
OEM examples		14
PCB model		15
Accessories		16

Draw-wire sensor mechanics with plastic housing
MK60-M

Model		WPS-2400-MK60-M
Measuring range	static (20 Hz)	2400 mm
Output type		dependent on encoder
Resolution	static (20 Hz)	dependent on encoder
Linearity	≤ ±0.1 % FSO	≤ ±2.4 mm
Mean distance per rotation		150.75 mm
Suitable rotary encoder		Flange type ø 58 mm: synchro flange ø 6 mm shaft
Adapter flange for rotary encoder ø 58	Synchro flange	included in delivery
Wire extension force (max)		8 N
Wire retraction force (min)		1 N
Wire acceleration (max.)		5 g
Material	Housing	Plastics
	Measuring wire	polyamide-coated stainless steel (ø 0.45 mm)
Wire mounting		Wire clip
Installation		Mounting holes
Temperature range	Storage	-20 … +80 °C
	Operation	-20 … +80 °C (on request -40 … +85 °C)
Shock (DIN EN 60068-2-29)		50 g / 5 ms in 3 axes, 2 directions and 1000 shocks each
Vibration (DIN EN 60068-2-6)		20 g / 20 Hz … 2 kHz in 3 axes and 10 cycles each
Protection class (DIN EN 60529)		dependent on encoder
Weight		0.2 kg

FSO = Full Scale Output
All data refer to the mechanics without encoder

wireSENSOR WPS-2400-MK60-M

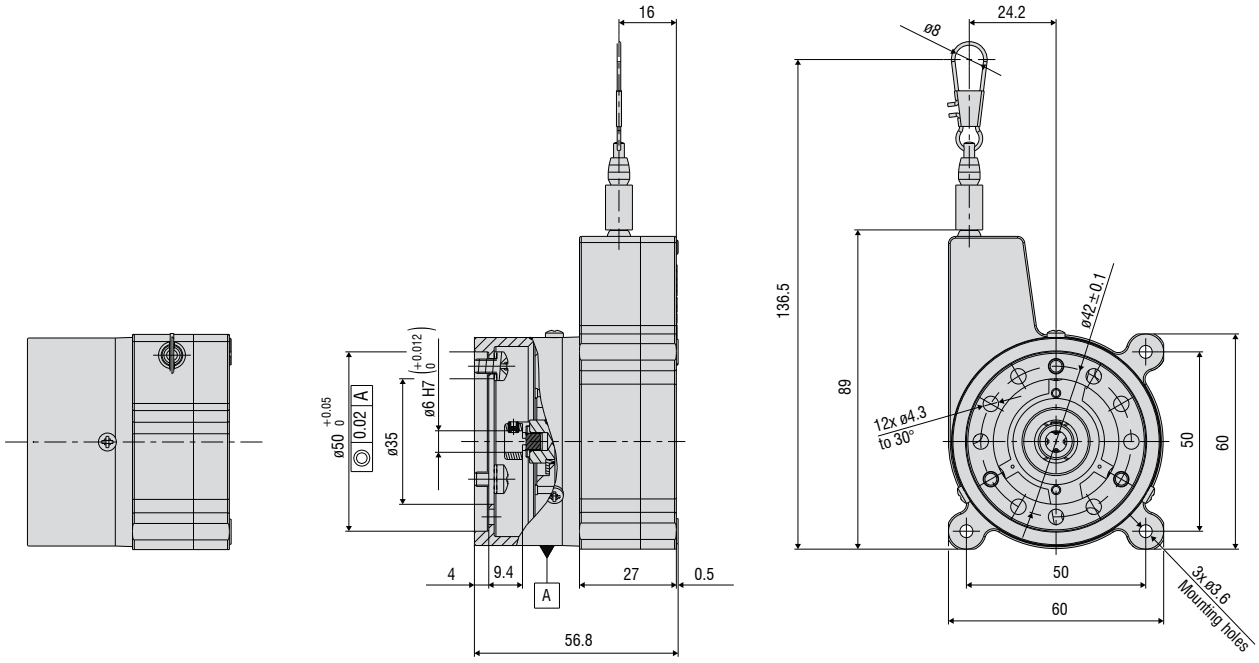

(dimensions in mm, not to scale)

Draw-wire sensor mechanics with plastic housing
MK88-M

Model		WPS-2300-MK88-M	WPS-3500-MK88-M	WPS-5000-MK88-M
Measuring range		2300 mm	3500 mm	5000 mm
Output type		dependent on encoder		
Resolution	static (20 Hz)	dependent on encoder		
Linearity	≤ ±0.1 % FSO	≤ ±2.3 mm	-	-
	≤ ±0.3 % FSO	-	≤ ±10.5 mm	-
	≤ ±0.4 % FSO	-	-	≤ ±20 mm
Mean distance per rotation		237.8 mm	238.1 mm	238.7 mm
Suitable rotary encoder		Flange type ø 58 mm: synchro flange ø 6 mm shaft		
Adapter flange for rotary encoder ø 58	Synchro flange	included in delivery		
Wire extension force (max)		approx. 9 N		
Wire retraction force (min)		approx. 4 N		
Wire acceleration (max.)		approx. 7 g		
Material	Housing	Plastics		
	Measuring wire	polyamide-coated stainless steel (ø 0.45 mm)		
Wire mounting		Wire clip		
Installation		Mounting holes or mounting grooves on the sensor housing		
Temperature range	Storage	-20 … +80 °C		
	Operation	-20 … +80 °C (on request -40 … +85 °C)		
Shock (DIN EN 60068-2-29)		50 g / 10 ms in 3 axes, 2 directions and 1000 shocks each		
Vibration (DIN EN 60068-2-6)		20 g / 20 Hz … 2 kHz in 3 axes and 10 cycles each		
Protection class (DIN EN 60529)		dependent on encoder		
Weight		0.5 kg		

FSO = Full Scale Output
All data refer to the mechanics without encoder

wireSENSOR WPS-MK88-M

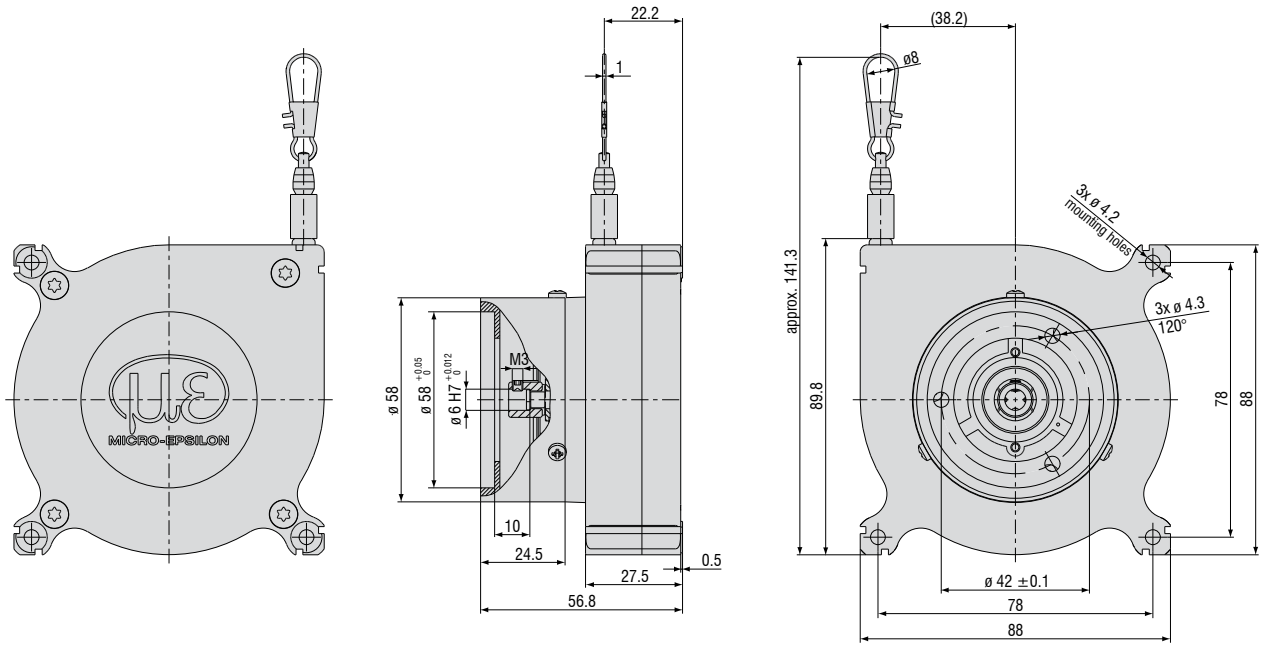

(dimensions in mm, not to scale)

Draw-wire sensor mechanics with plastic housing
WPS-K100-M

Model		WPS-1500-K100-M	WPS-2500-K100-M	WPS-3500-K100-M	WPS-5000-K100-M	WPS-8000-K100-M
Measuring range		1500 mm	2500 mm	3500 mm	5000 mm	8000 mm
Output type		dependent on encoder				
Resolution		dependent on encoder				
Linearity	≤ ±0.10 % FSO	≤ ±1.5 mm	≤ ±2.5 mm	≤ ±3.5 mm	≤ ±5 mm	-
	≤ ±0.25 % FSO	-	-	-	-	≤ ±20 mm
Mean distance per rotation		263.6 mm			263.1 mm	263.75 mm
Suitable rotary encoder		Flange type ø 58 mm: synchro flange ø 6 mm shaft				
Adapter flange for rotary encoder ø 58	Synchro flange	included in delivery				
Wire extension force (max)		approx. 10 N				
Wire retraction force (min)		approx. 2 N				
Wire acceleration (max.)		approx. 5 g				
Material	Housing	Glass-fiber reinforced plastic				
	Measuring wire	Polyamide-coated stainless steel (ø 0.61 mm)			Polyamide-coated stainless steel (ø 0.45 mm)	
Wire mounting		Wire clip				
Installation		Through-bores ø 6.4 mm and mounting nuts (for M6) on the sensor housing				
Temperature range	Storage	-40 … +85 °C				
	Operation	-40 … +85 °C				
Shock (DIN EN 60068-2-29)		50 g / 8 ms in 3 axes, 2 directions and 1000 shocks each				
Vibration (DIN EN 60068-2-6)		5 g / 10 … 150 Hz in 3 axes and 20 cycles each				
Protection class (DIN EN 60529)		dependent on encoder				
Weight		approx. 500 g				

FSO = Full Scale Output
All data refer to the mechanics without encoder

WPS-1500-K100-M / WPS-2500-K100-M

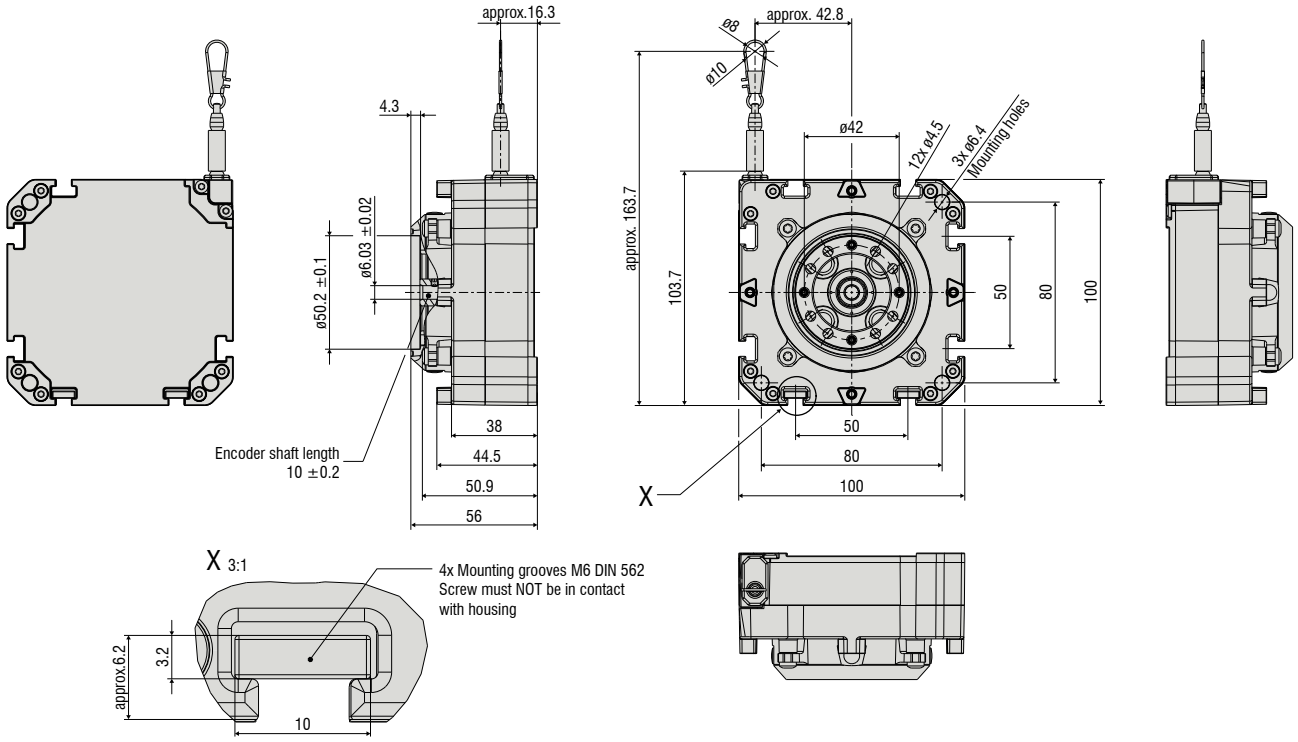

WPS-3500-K100-M / WPS-5000-K100-M / WPS-8000-K100-M

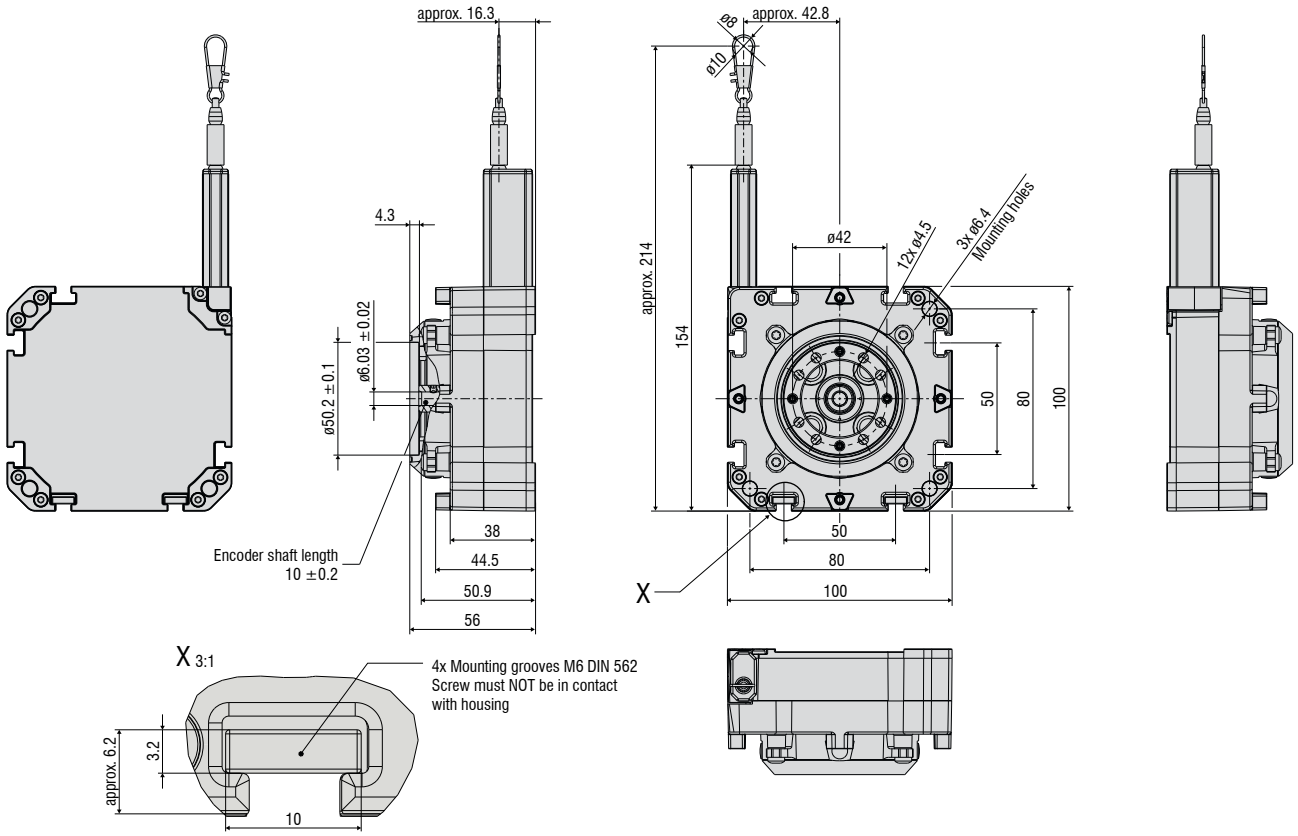

(dimensions in mm, not to scale)

Draw-wire mechanics with aluminum housing
P60-M

Model		WDS-2000-P60-M
Measuring range	static (20 Hz)	2000 mm
Output type		dependent on encoder
Resolution	static (20 Hz)	dependent on encoder
Linearity	≤ ±0.02 % FSO	≤ ±0.4 mm
Mean distance per rotation		150 mm
Suitable rotary encoder		Flange type ø 58 mm: synchro flange ø 6 mm shaft
Wire extension force (max)		7 N
Wire retraction force (min)		3.5 N
Wire acceleration (max.)		10 g
Material	Housing	Aluminum
	Measuring wire	polyamide-coated stainless steel (ø 0.45 mm)
Wire mounting		M4 threaded bolts
Installation		Mounting grooves on the sensor housing
Temperature range	Storage	-40 … +80 °C
	Operation	-20 … +80 °C
Shock (DIN EN 60068-2-29)		50 g / 10 ms in 3 axes, 2 directions and 1000 shocks each
Vibration (DIN EN 60068-2-6)		20 g / 20 Hz … 2 kHz in 3 axes and 10 cycles each
Protection class (DIN EN 60529)		dependent on encoder
Weight		1 kg

FSO = Full Scale Output
All data refer to the mechanics without encoder

wireSENSOR WDS-2000-P60-M

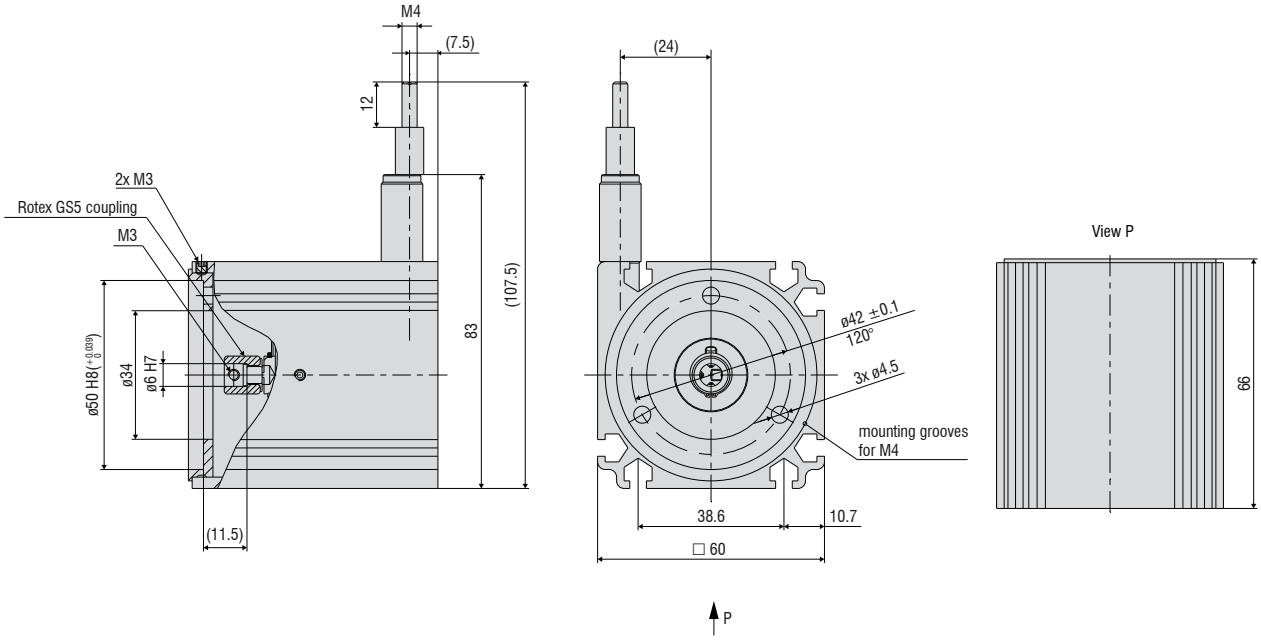

(dimensions in mm, not to scale)

Draw-wire mechanics with aluminum housing
P85-M

Model		WDS-2500-P85-M
Measuring range	static (20 Hz)	2500 mm
Output type		dependent on encoder
Resolution	static (20 Hz)	dependent on encoder
Linearity	≤ ±0.02 % FSO	≤ ±0.5 mm
Mean distance per rotation		199.8 mm
Suitable rotary encoder		Flange type ø 58 mm: synchro flange ø 6 mm shaft, clamping flange ø 10 mm shaft
Adapter flange for rotary encoder ø 58 mm	Synchro flange	included in delivery
	Clamping flange	WDS-EAC115
Wire extension force (max)		16 N
Wire retraction force (min)		6 N
Wire acceleration (max.)		5 g
Material	Housing	Aluminum
	Measuring wire	polyamide-coated stainless steel (ø 1.2 mm)
Wire mounting		Eyelet (ø 30 mm)
Installation		Mounting grooves on the sensor housing
Temperature range	Storage	-40 … +80 °C
	Operation	-20 … +80 °C
Shock (DIN EN 60068-2-29)		50 g / 10 ms in 3 axes, 2 directions and 1000 shocks each
Vibration (DIN EN 60068-2-6)		20 g / 20 Hz … 2 kHz in 3 axes and 10 cycles each
Protection class (DIN EN 60529)		dependent on encoder
Weight		1 kg

FSO = Full Scale Output
All data refer to the mechanics without encoder

wireSENSOR WDS-2500-P85-M

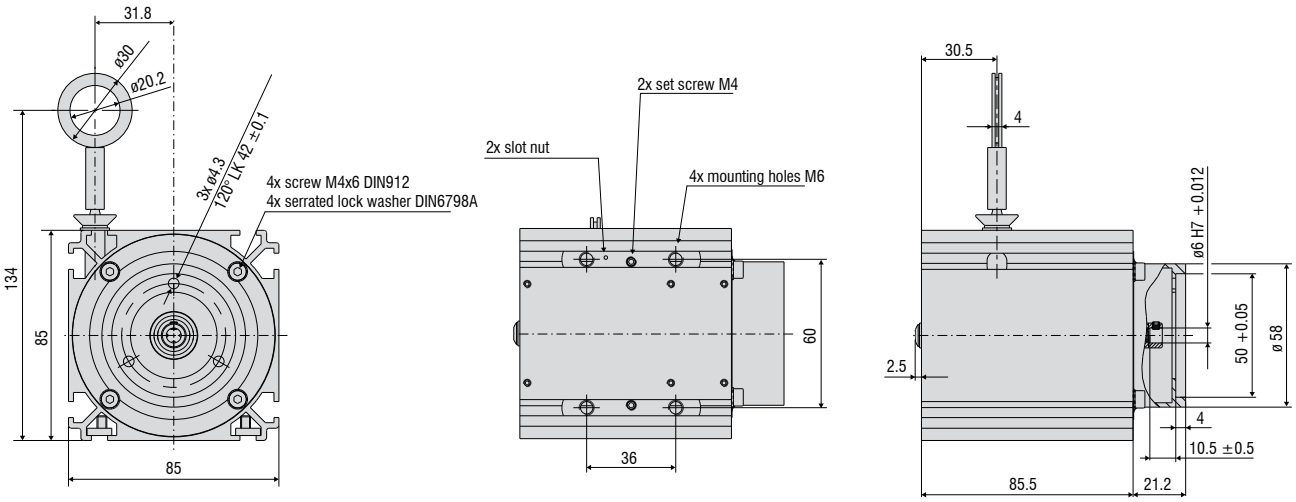

(dimensions in mm, not to scale)

Draw-wire mechanics with aluminum housing
P96-M

Model		WDS-3000-P96-M
Measuring range	static (20 Hz)	3000 mm
Output type		dependent on encoder
Resolution	static (20 Hz)	dependent on encoder
Linearity	≤ ±0.02 % FSO	≤ ±0.6 mm
Mean distance per rotation		260.09 mm
Suitable rotary encoder		Flange type ø 58 mm: synchro flange ø 6 mm shaft, clamping flange ø 10 mm shaft
Adapter flange for rotary encoder ø 58 mm	Synchro flange	included in delivery
	Clamping flange	WDS-EAC 96/200
Wire extension force (max)		10 N
Wire retraction force (min)		5 N
Wire acceleration (max.)		7 g
Material	Housing	Aluminum
	Measuring wire	polyamide-coated stainless steel (ø 0.8 mm)
Wire mounting		M4 threaded bolts
Installation		Slot nuts
Temperature range	Storage	-40 … +80 °C
	Operation	-20 … +80 °C
Shock (DIN EN 60068-2-29)		50 g / 10 ms in 3 axes, 2 directions and 1000 shocks each
Vibration (DIN EN 60068-2-6)		20 g / 20 Hz … 2 kHz in 3 axes and 10 cycles each
Protection class (DIN EN 60529)		dependent on encoder
Weight		1.1 kg

FSO = Full Scale Output
All data refer to the mechanics without encoder

wireSENSOR WDS-3000-P96-M

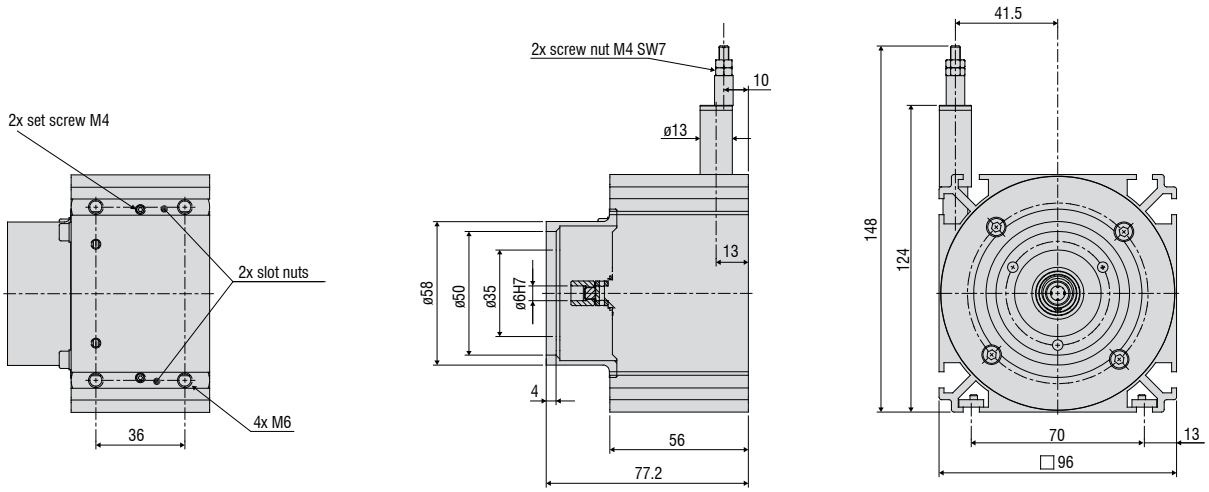

(dimensions in mm, not to scale)

Draw-wire mechanics with aluminum housing
P115-M

Model		WDS-5000-P115-M	WDS-7500-P115-M	WDS-10000-P115-M	WDS-15000-P115-M
Measuring range	static (20 Hz)	5000 mm	7500 mm	10000 mm	15000 mm
Output type		dependent on encoder			
Resolution	static (20 Hz)	dependent on encoder			
Linearity	≤ ±0.01 % FSO	-	-	≤ ±1 mm	≤ ±1.5 mm
	≤ ±0.02 % FSO	≤ ±1 mm	≤ ±1.5 mm	-	-
Mean distance per rotation		315.07 mm			
Suitable rotary encoder		Flange type ø 58 mm: synchro flange ø 6 mm shaft, clamping flange ø 10 mm shaft			
Adapter flange for rotary encoder ø 58 mm	Synchro flange	included in delivery			
	Clamping flange	WDS-EAC 115			
Wire extension force (max)		16 N	24 N	21 N	25 N
Wire retraction force (min)		4 N	8 N	8 N	8 N
Wire acceleration (max.)		5 g	6 g	3 g	3 g
Material	Housing	Aluminum			
	Measuring wire	polyamide-coated stainless steel (ø 1.0 mm)			
Wire mounting		Eyelet (ø 30 mm)			
Installation		Slot nuts			
Temperature range	Storage	-40 … +80 °C			
	Operation	-20 … +80 °C			
Shock (DIN EN 60068-2-29)		50 g / 10 ms in 3 axes, 2 directions and 1000 shocks each			
Vibration (DIN EN 60068-2-6)		20 g / 20 Hz … 2 kHz in 3 axes and 10 cycles each			
Protection class (DIN EN 60529)		dependent on encoder			
Weight		1.4 kg	1.9 kg	2.8 kg	3.2 kg

FSO = Full Scale Output
All data refer to the mechanics without encoder

wireSENSOR WDS-P115-M

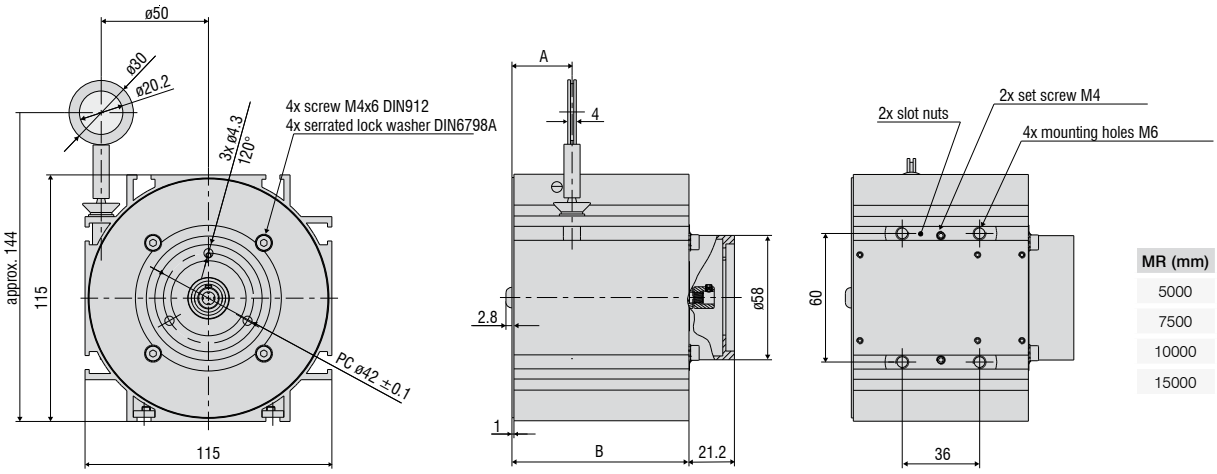

MR (mm)	A (mm)	B (mm)
5000	28	82.5
7500	37	105.5
10000	44,5	148.5
15000	61	180.5

(dimensions in mm, not to scale)

Draw-wire mechanics with aluminum housing
P200-M

Model		WDS-30000-P200-M	WDS-40000-P200-M	WDS-50000-P200-M
Measuring range	static (20 Hz)	30000 mm	40000 mm	50000 mm
Output type		dependent on encoder		
Resolution	static (20 Hz)	dependent on encoder		
Linearity	≤ ±0.01 % FSO	≤ ±3 mm	≤ ±4 mm	≤ ±5 mm
Mean distance per rotation		500 mm		
Suitable rotary encoder		Flange type ø 58 mm: synchro flange ø 6 mm shaft, clamping flange ø 10 mm shaft		
Adapter flange for rotary encoder ø 58 mm	Synchro flange	included in delivery		
	Clamping flange	WDS-EAC 96/200		
Wire extension force (max)		22 N	22 N	24 N
Wire retraction force (min)		12 N	11 N	11 N
Wire acceleration (max.)		2 g		
Material	Housing	Aluminum		
	Measuring wire	polyamide-coated stainless steel (ø 0.8 mm)		
Wire mounting		Eyelet (ø 30 mm)		
Installation		Slot nuts		
Temperature range	Storage	-40 … +80 °C		
	Operation	-20 … +80 °C		
Vibration (DIN EN 60068-2-6)		20 g / 20 Hz … 2 kHz in 3 axes and 10 cycles each		
Protection class (DIN EN 60529)		dependent on encoder		
Weight		9.5 kg	10 kg	11 kg

FSO = Full Scale Output
All data refer to the mechanics without encoder

wireSENSOR P200-M

MR (mm)	A (mm)	B (mm)
30000	268	75
40000	300	95
50000	333.5	95

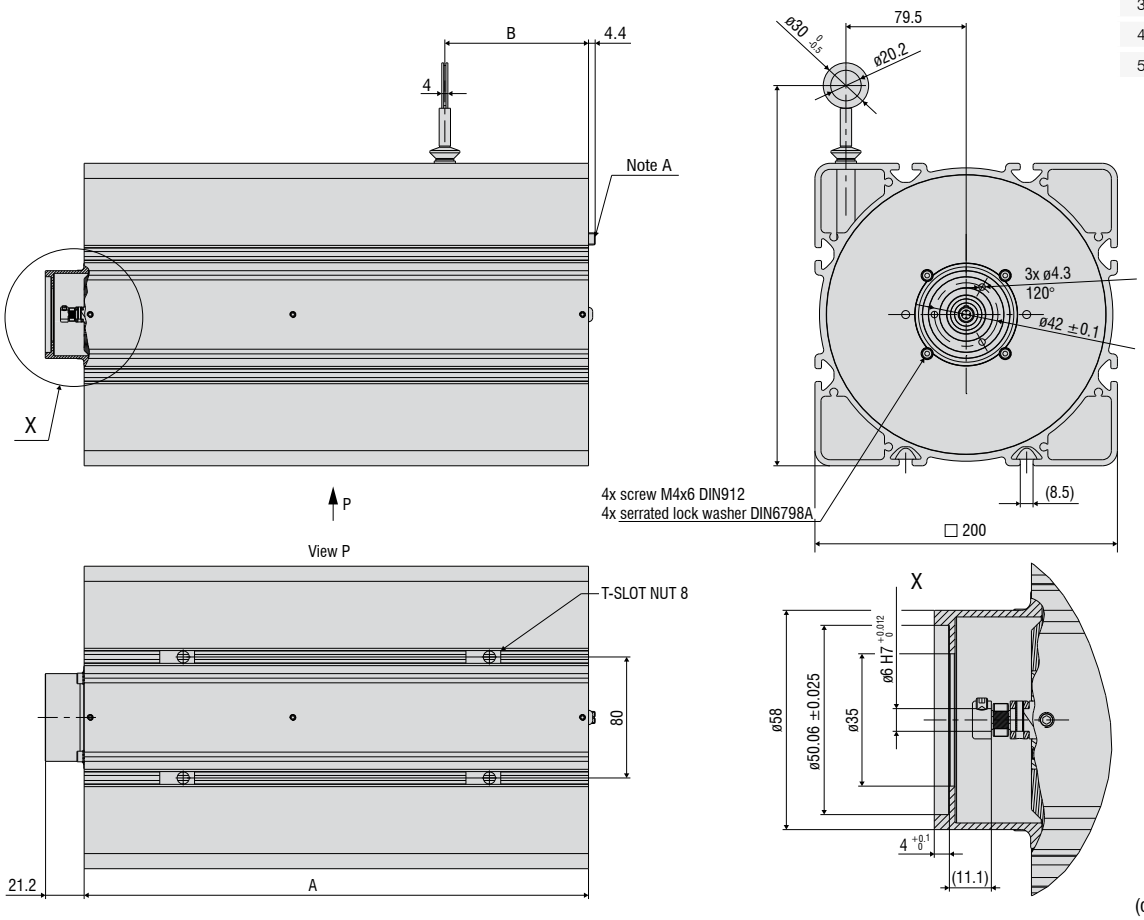

(dimensions in mm, not to scale)

Options
wireSENSOR

Customized draw-wire mechanics

Micro-Epsilon also develops sensors for special requirements that are not met by standard models. Draw-wire mechanics from the standard range can be modified accordingly. Low-cost implementation can already be achieved with medium-sized quantities (depending on the type and number of changes).

Measuring wire
- Plastics
- Stainless steel
- Different diameters
- Coated / uncoated

Mounting
- Wire clip
- Eyelet
- Thread
- Different diameters

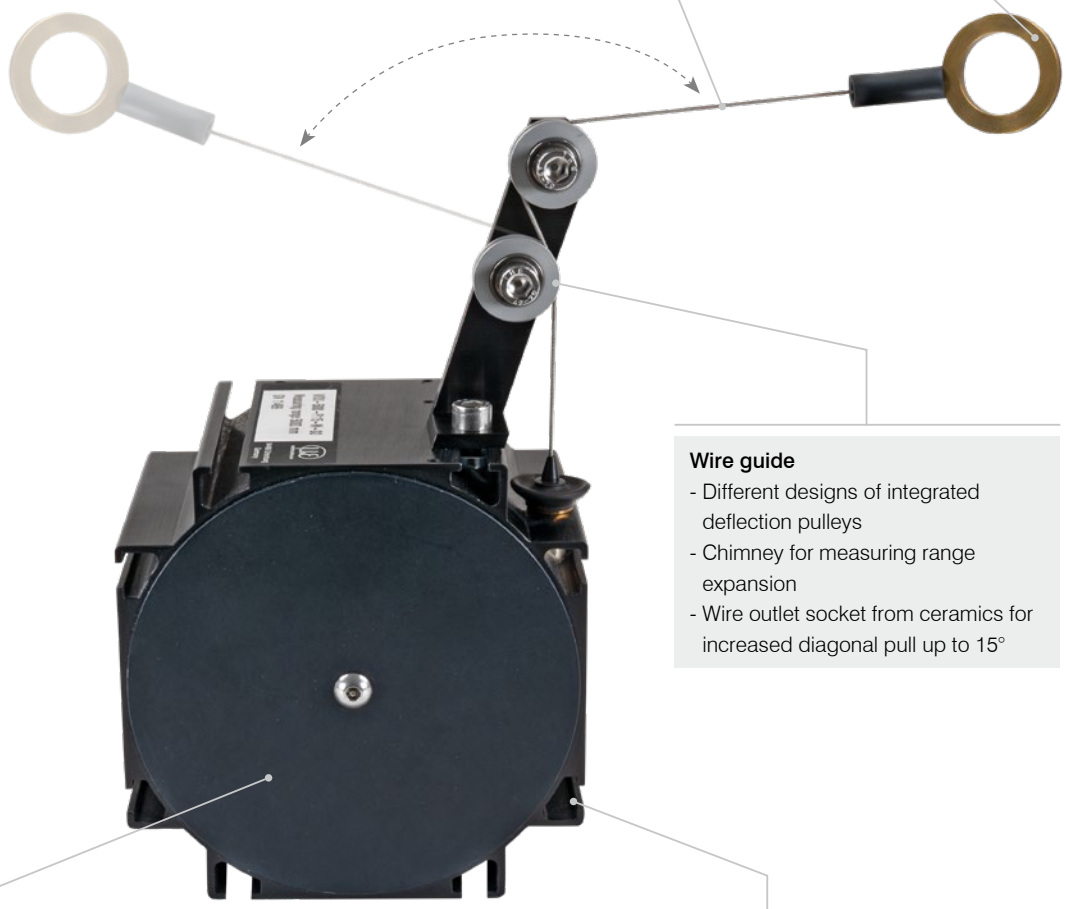

Wire guide
- Different designs of integrated deflection pulleys
- Chimney for measuring range expansion
- Wire outlet socket from ceramics for increased diagonal pull up to 15°

Housing material
- Plastics
- Aluminum
- Stainless steel
- Hard coating with enhanced corrosion resistance

Design
- Wire outlet left / right
- Protection class IP69K
- Water drainage holes
- Stainless steel spring

OEM examples
wireSENSOR

Z60 Sensor mechanics / stainless steel housings
Sensor mechanics entirely made from stainless steel for difficult ambient conditions (salt water)

MK88 Sensor mechanics to monitor telescopic booms
- Integrated deflection pulley made from plastic with secured "wire guidance"
- High spring force
- IP67 / -40 °C … 80 °C
- Robust plastic housing

MK88-M Snap-protected sensors with plastic housing
Measuring wire can snap back from a distance up to 60 cm without damaging the measuring wire or the sensor.

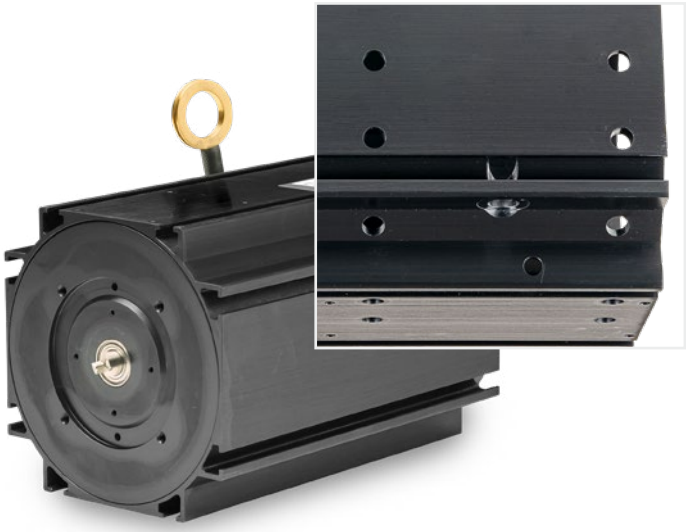

P115 Sensor mechanics with aluminum housing and drainage holes
- Drainage holes to drain condensed water
- Suitable for outdoor applications
- Measuring ranges up to 15,000 mm

Wire-sensor mechanics for PCB integration
wireSENSOR

Integration of PCBs

These draw-wire mechanics can be configured to directly connect with a PCB. With this variant, the PCB is directly connected to the sensor mechanics. Depending on the needs, the installation can be performed at the factory or by the customer.

MK60 and M88 mechanics for PCB integration are available from stock. With a certain number of pieces, other series may also be used for PCB integration.

Compared with conventional encoders, PCB solutions offer a great cost advantage. As the functionality of PCBs usually is sufficient, this price advantage can be optimally used with draw-wire sensors from Micro-Epsilon.

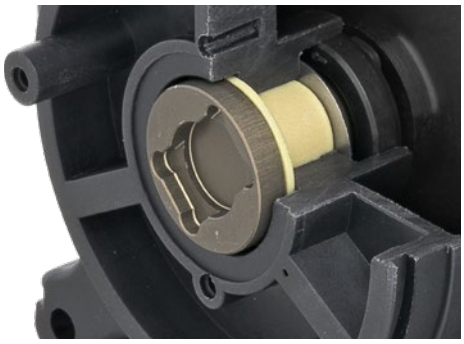

Magnets are available in different designs.

Accessories
wireSENSOR

Adapter flanges

Synchro flange
Standard
WDS-EAS115

Clamping flange
Option
WDS-EAC115

Synchro flange for MK series
Standard

Different adaptions for OEM application
e.g., small clamping flange
Optional for OEM

Example application with accessories

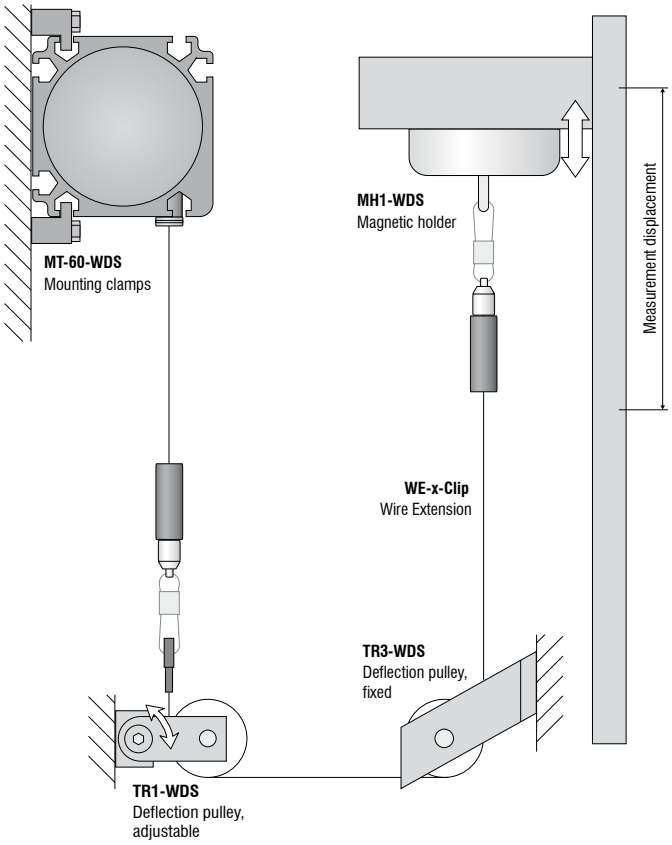

Wire extensions

WE-xxxx-M4
Wire extension with M4 wire connection, x=wire length

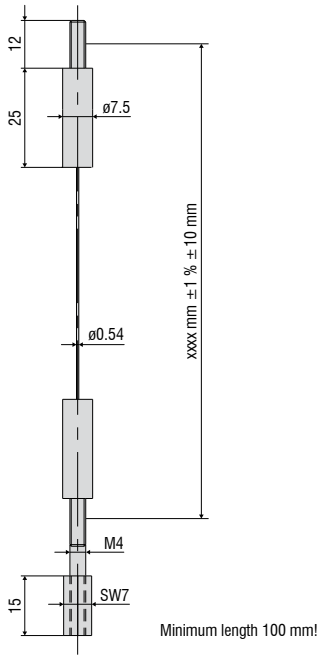

WE-xxxx-Clip
Wire extension with eyelet, x = wire length

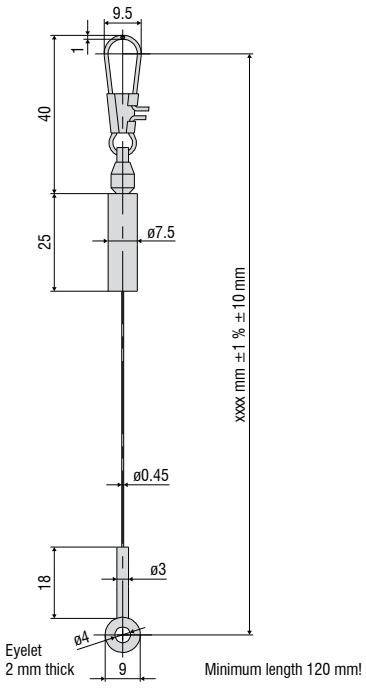

Installation options

WDS-MP60
Mounting plate for P60 models

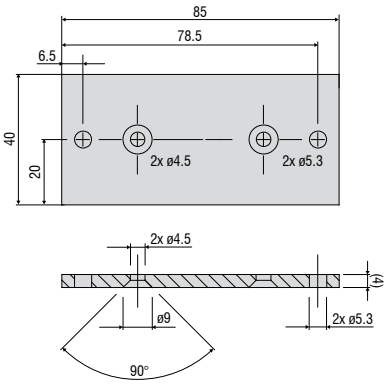

Installation instructions:
Wire attachment: during installation, do not allow at any time the measuring wire to freely return.
Angle of wire outlet: Make sure during installation that the wire outlet is straight (tolerance of ±3°). Exceeding this tolerance leads to increased wear of the wire material and on the wire outlet.

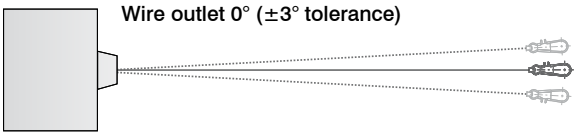

MH1-WDS
Magnetic holder for wire attachment

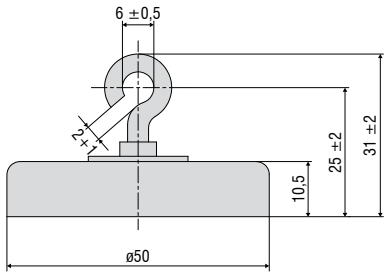

MH2-WDS
Magnetic holder for sensor mounting

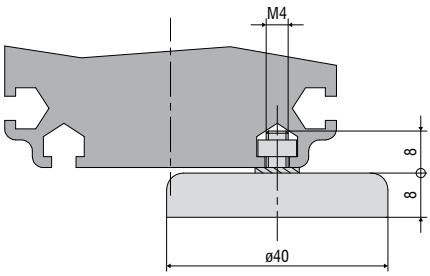

GK1-WDS
Fork head for M4

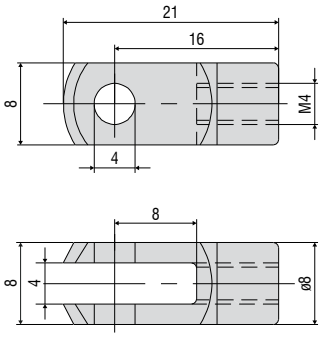

MT-60-WDS
Mounting clamps for WDS-P60

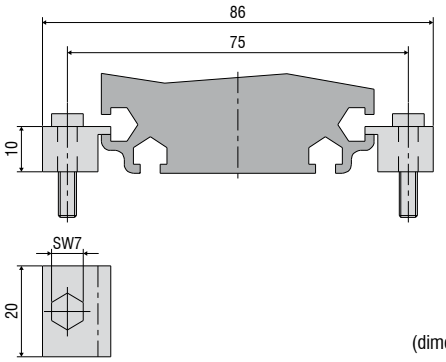

(dimensions in mm, not to scale)

Wire deflection pulleys for external installation

TR1-WDS
Wire deflection pulley, adjustable, for sensors with a wire diameter ≤ 0.45 mm

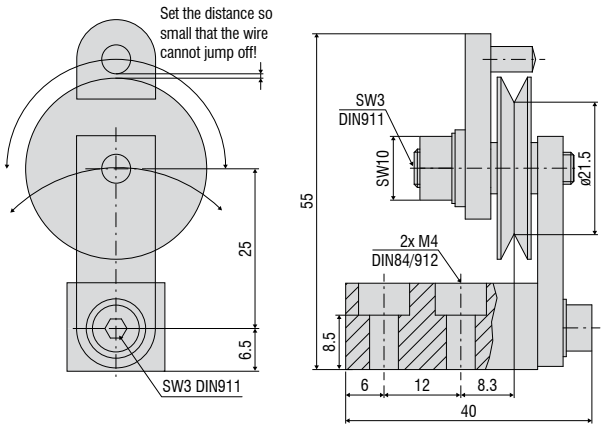

TR3-WDS
Wire deflection pulley, fixed, for sensors with a wire diameter ≤ 0.45 mm

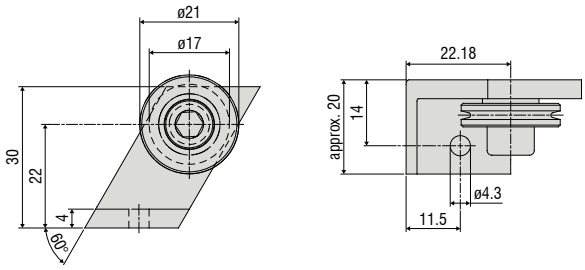

TR4-WDS
Wire deflection pulley, fixed, for sensors with a wire diameter of 0.8 mm to 1 mm

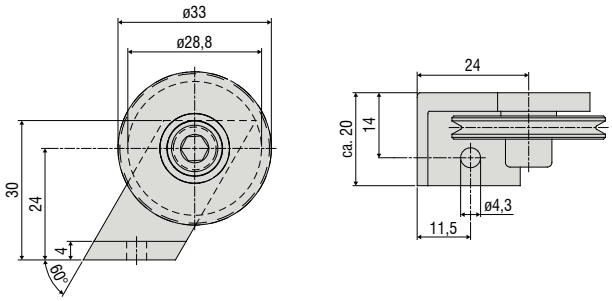

Wire deflection pulley for direct installation on the sensor housing

TR5-WDS
Integrated wire deflection pulley for P115 sensors with a wire diameter of 0.45 mm

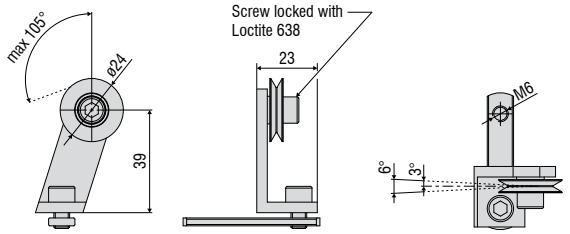

TR5-WDS(03)
Integrated double deflection pulley for P115 sensors with a wire diameter of 0.45 mm

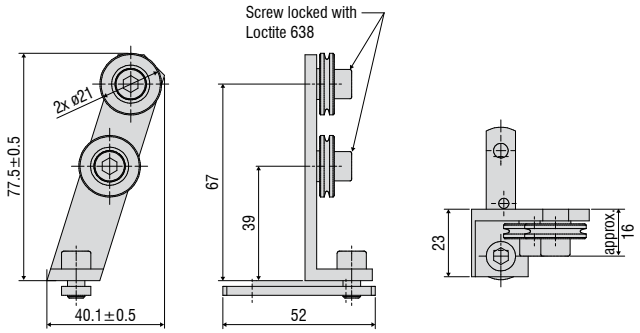

TR5-WDS(04)
Integrated double deflection pulley, 90° angled, for P115 sensors with a wire diameter of 0.45 mm

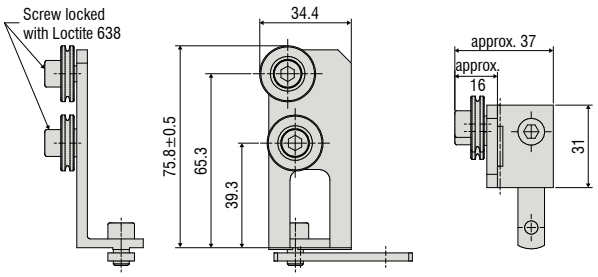

TR6-WDS(01)
Integrated wire deflection pulley for the P115 sensors with a wire diameter of 1 mm

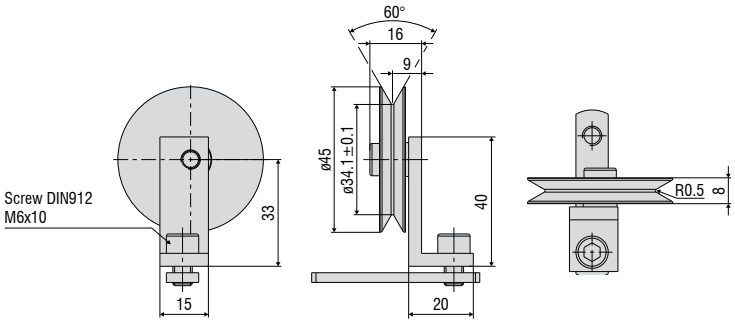

(dimensions in mm, not to scale)

Sensors and Systems from Micro-Epsilon

Sensors and systems for displacement, distance and position

Sensors and measurement devices for non-contact temperature measurement

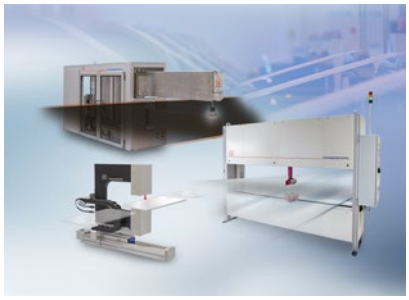

Measuring and inspection systems for metal strips, plastics and rubber

Optical micrometers and fiber optics, measuring and test amplifiers

Color recognition sensors, LED analyzers and inline color spectrometers

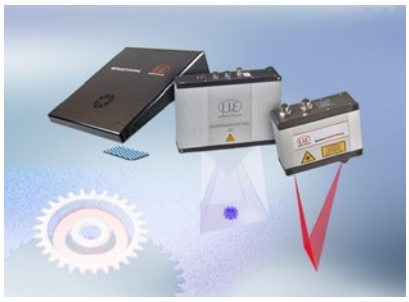

3D measurement technology for dimensional testing and surface inspection

Modifications reserved / Y9761702-A052075GKE

MICRO-EPSILON

MICRO-EPSILON Headquarters
Koenigbacher Str. 15 · 94496 Ortenburg / Germany
Tel. +49 (0) 8542 / 168-0 · Fax +49 (0) 8542 / 168-90
info@micro-epsilon.com · **www.micro-epsilon.com**